Appendices

Appendix A:
Monitor Well Boring Logs

GENERAL SOIL CATEGORIES			SYMBOLS GRAPHIC	SYMBOLS LETTER	TYPICAL SOIL TYPES
COARSE GRAINED SOILS More than half is larger than no. 200 sieve	**Gravel** More than half of coarse fraction is larger than No. 4 sieve size	Clean Gravel with little or no fines		GW	Well Graded Gravels, Gravel - Sand mixtures
				GP	Poorly Graded Gravels, Gravel - Sand mixtures
		Gravel with more than 12% fines		GM	Silty Gravels, Poorly Graded; Gravel - Sand - Silt Mixtures
				GC	Clayey Gravels, Poorly Graded; Gravel - Sand - Clay Mixtures
	Sand More than half of coarse fraction is smaller than No. 4 sieve size	Clean Sand with little or no fines		SW	Well Graded Sands, Gravelly Sands
				SP	Poorly Graded Sands, Gravelly Sands
		Sand with more than 12% fines		SM	Silty Sands, Poorly Graded; Sand - Silt Mixtures
				SC	Clayey Sands, Poorly Graded; Sand - Clay Mixtures
FINE GRAINED SOILS More than half is smaller than no. 200 sieve	**Silt and Clay** Liquid Limit Less than 50%			ML	Inorganic Silts and Very Fine Sands, Rock Flour, Silty or Clayey Fine Sands or Clayey Silts with Slight Plasticity
				CL	Inorganic Clays of Low to Medium Plasticity, Gravelly Clays, Sandy Clays, Silty Clays, Lean Clays
				OL	Organic Silts and Organic Silty Clays of Low Plasticity
	Silt and Clay Liquid Limit Greater than 50%			MH	Inorganic Silts, Micaceous or Diatomaceous Fine Sandy or Silty Soils, Elastic Silts
				CH	Inorganic Clays of High Plasticity, Fat Clays
				OH	Organic Clays of Medium to High Plasticity
Highly Organic Soils				PT	Peat and Other Highly Organic Soils
Bedrock				BR	Bedrock
Aggregate Base				B	Mixed Fill
Asphalt				A	Asphalt
Concrete				C	Concrete

■ Soil sample submitted for chemical analysis

☒ Soil sample examined for soil classification

Sampler Type
CMSS = CA Modified Split Spoon
SPT = Standard Penetration Test
CBS = Continuous Barrel Sampler
GRAB = Grab Sample
HA = Hand Auger

▼ Initial Static Water Level

▽ First Identified Free Water

n.a. = not applicable
n.r. = not recorded

SCS ENGINEERS
Environmental Consultants
434 7th Street, Suite B
Eureka, California 95501-1803
Ph.: 707-476-1590 Fax: 707-476-1589

UNIFIED SOIL CLASSIFICATION SYSTEM CHART and BORING LOG LEGEND

Schmidbauer Lumber
1099 Waterfront Drive
Eureka, California 95501
Job Number: 01203316.00

Figure:
Appendix A
A-1

Date (start, end): 9/19/05 - 9/19/05
Drilling Time (start, end) 12:57 - 14:58
Logged By: Karin W. Fresnel
Checked By:

Boring No.
MW-10

Boring Location: ~5' south of B-1

See Unified Soil Classification System (USCS) for Legend and information not noted.

Drilling Contractor: Clear Heart Drilling, Inc.
Driller's Name: Pablo Trejo Gonzalas
Drilling Method: 8-in Hollow-Stem Auger
Sampling Method: CMSS
Hammer weight / fall: 140 lbs / 30 inch
Notes: Continuous core from 2.0 feet

MW Installed: Y ☒ N ☐ if no, boring backfilled with:
Cement ☐ Bentonite: Cement ☐ Grout ☐ Chips ☐
Auger Depth, ft: 15.0 Total Depth, ft: 16.5

Sample	Inches Recovered	Blows / 6 in	Sampler Type	Water Levels	PID (ppm)	Odor	Discoloration	Elevation	Depth in Feet	Graphic Log	Gravel %	Sand %	Silt %	Clay %	Lithologic Description and Drilling Comments:
								11.5							
								11.2							**ASPHALT**.
									1						Baserock (FILL)
								10.0							**SAND** (SW): Dark greenish gray [5GY 4/1], fine grained sand, dense, moist.
☒	5	15	CMSS						2			100			
■	6	22							3						
☒	6	23													
☒	6	4	CMSS						4						
☒	6	2													Wet.
☒	6	1						7.0				80	20		**SILTY SAND** (SM): Very dark gray [N3], fine grained sand, loose, wet.
						No			5						
								5.8							
							No		6			100			**SAND** (SW): Grayish black (N2), fine grained sand, loose, saturated, no plasticity.
☒	0	1	CMSS	▽											
■	6	2							7						
☒	6	3													
☒	0	6	CMSS						8						
☒	2	7													
☒	6	8						3.0							**CLAY** (CH): Brownish gray (5YR 4/1), stiff to very stiff, saturated, high plasticity, abundant roots & grass, decay odor.
									9						
								2.3						100	**SAND with Silt** (SW-SM): Grayish black (N2), loose, wet.
									10						
☒	6	6	CMSS												
☒	6	4										90	10		
■	6	4				Yes			11						
								0.3							
☒	6	3						-0.3				70	10	20	**CLAYEY SAND** (SC): Greenish black (5G 2/1), fine grained sand, loose, wet, no to low plasticity, few to no roots with increasing depth.

SCS ENGINEERS
Environmental Consultants
434 7th Street, Suite B
Eureka, California 95501-1803
Ph.: 707-476-1590 Fax: 707-476-1589

BORING LOG MW-10

Schmidbauer Lumber
1099 Waterfront Drive
Eureka, California 95501
Job Number: 01203316.00

Figure:
Appendix A
MW-10

SCS-SANTA ROSA BORING LOG 01203316.00.GPJ SCS-SANTA ROSA.GDT 11/22/05

Sample	Inches Recovered	Blows / 6 in	Sampler Type	Water Levels	PID (ppm)	Odor	Discoloration	Elevation	Depth in Feet	Graphic Log	Gravel %	Sand %	Silt %	Clay %	Lithologic Description and Drilling Comments:
X	6	3	CMSS									90	10		**SAND with Silt** (SW-SM): Dark greenish gray (5G 4/1), fine grained sand, well graded, loose to medium dense, saturated, no plasticity, few roots, salt odor.
X	6	4													
									13						
X	6	3	CMSS												
X	6	5													
X	6	8				Yes	No		14			90	10		No roots.
									15						
X	6	7	CMSS												
X	6	11							16						
■	6	14						-5.0				90	10		
									17						TOTAL DEPTH = 16.5 FEET
									18						
									19						
									20						
									21						
									22						
									23						
									24						
									25						
									26						
									27						

SCS ENGINEERS

Environmental Consultants
434 7th Street, Suite B
Eureka, California 95501-1803
Ph.: 707-476-1590 Fax: 707-476-1589

BORING LOG MW-10

Schmidbauer Lumber
1099 Waterfront Drive
Eureka, California 95501
Job Number: 01203316.00

Figure:
Appendix A
MW-10

SCS-SANTA ROSA BORING LOG 01203316.00.GPJ SCS-SANTA ROSA.GDT 11/22/05

Date (start, end): 9/19/05 - 9/19/05
Drilling Time (start, end) 14:30 - 16:45
Logged By: Karin W. Fresnel
Checked By:

Boring No.
MW-11

Boring Location: Adjacent to northwest corner of Sawmill

See Unified Soil Classification System (USCS) for Legend and information not noted.

Drilling Contractor: Clear Heart Drilling, Inc.
Driller's Name: Pablo Trejo Gonzalas
Drilling Method: 8-in Hollow-Stem Auger
Sampling Method: CMSS
Hammer weight / fall: 140 lbs / 30 inch
Notes: Continuous core from 2.0 feet

MW Installed: Y ☒ N ☐ if no, boring backfilled with:
Cement ☐ Bentonite: Cement ☐ Grout ☐ Chips ☐
Auger Depth, ft: 15.0 Total Depth, ft: 16.5

Sample	Inches Recovered	Blows / 6 in	Sampler Type	Water Levels	PID (ppm)	Odor	Discoloration	Elevation	Depth in Feet	Graphic Log	Gravel %	Sand %	Silt %	Clay %	Lithologic Description and Drilling Comments:
								11.5							
								11.3							**ASPHALT**.
									1						**FILL**: river run base rock, dry to moist.
								10.0							**SAND** (SW): Medium light gray (N6), medium dense, moist.
X	6	14	CMSS						2			100			
■	6	16							3						
X	6	20													
X	3	11	CMSS						4						
X	6	11													
X	6	8		▽					5			100			Grayish black (N2), saturated.
X	6	4	CMSS												
■	6	5							6			100			
X	5	5													
X	6	2	CMSS			No	No		7						Medium dark gray (N4), very loose, wet, shells, roots.
X	6	2													
X	5	1							8						
X	0	4	CMSS					3.3				100			**SAND** (SP): Dark gray [N4], fine grained sand, saturated, no plasticity, loose, some roots.
X	4	5							9						
X	6	6													
									10						
X	4	4	CMSS												
■	6	5										100			
X	5	7							11						
X	4	3													

SCS ENGINEERS
Environmental Consultants
434 7th Street, Suite B
Eureka, California 95501-1803
Ph.: 707-476-1590 Fax: 707-476-1589

BORING LOG MW-11

Schmidbauer Lumber
1099 Waterfront Drive
Eureka, California 95501
Job Number: 01203316.00

Figure:
Appendix A
MW-11

SCS-SANTA ROSA BORING LOG 01203316.00.GPJ SCS-SANTA ROSA.GDT 11/22/05

Sample	Inches Recovered	Blows / 6 in	Sampler Type	Water Levels	PID (ppm)	Odor	Discoloration	Elevation	Depth in Feet	Graphic Log	Gravel %	Sand %	Silt %	Clay %	Lithologic Description and Drilling Comments:
	6	3	CMSS					-0.8							
	6	5							13			70	10	20	**CLAYEY SAND** (SC): Greenish black (5G 2/1), fine grained sand, well graded, stiff, saturated, low plasticity, with some roots.
	4	4	CMSS					-1.8							**SAND** (SP): Grayish black (N2), fine grained sand, well graded, loose, saturated, no plasticity.
	6	5							14						
	6	7				No	No								
									15			90	5	5	
	6	7	CMSS												
	6	12							16						
	6	15													Medium dense.
								-5.0							
									17						TOTAL DEPTH = 16.5 FEET
									18						
									19						
									20						
									21						
									22						
									23						
									24						
									25						
									26						
									27						

SCS ENGINEERS

Environmental Consultants
434 7th Street, Suite B
Eureka, California 95501-1803
Ph.: 707-476-1590 Fax: 707-476-1589

BORING LOG MW-11

Schmidbauer Lumber
1099 Waterfront Drive
Eureka, California 95501
Job Number: 01203316.00

Figure:
Appendix A
MW-11

SCS-SANTA ROSA BORING LOG 01203316.00.GPJ SCS-SANTA ROSA.GDT 11/22/05

Date (start, end): 9/20/05 - 9/20/05
Drilling Time (start, end) 08:55 - 10:07
Logged By: Karin W. Fresnel
Checked By:

Boring No.
MW-12

Boring Location: SW corner of office

See Unified Soil Classification System (USCS) for Legend and information not noted.

Drilling Contractor: Clear Heart Drilling, Inc.
Driller's Name: Pablo Trejo Gonzalas
Drilling Method: 8-in Hollow-Stem Auger
Sampling Method: CMSS
Hammer weight / fall: 140 lbs / 30 inch
Notes: Continuous core from 2.0 feet

MW Installed: Y ☒ N ☐ if no, boring backfilled with:
Cement ☐ Bentonite: Cement ☐ Grout ☐ Chips ☐
Auger Depth, ft: 15.0 Total Depth, ft: 16.0

Sample	Inches Recovered	Blows / 6 in	Sampler Type	Water Levels	PID (ppm)	Odor	Discoloration	Elevation	Depth in Feet	Graphic Log	Gravel %	Sand %	Silt %	Clay %	Lithologic Description and Drilling Comments:
								11.5							**ASPHALT**.
								10.5	1						**FILL**: base rock, dry.
								10.0				40	60		**SANDY SILT** (ML): Light olive gray (5Y 6/1) and moderate olive brown [5Y 4/4], fine grained sand, moist, low plasticity, mottled.
									2						
☒	6	12	CMSS			↑	↑	9.0							
■	6	24	CMSS						3			100			**SAND** (SW): Moderate olive brown (5Y 4/4), medium grained sand, moist, dense.
☒	6	26	CMSS												
								8.0				40	60		**SILT** (ML): Dark greenish gray [5G 4/1] Light brownish gray [10YR 6/2], fine grained sand, moist, with shells, stiff.
☒	4	9	CMSS					7.5	4						**SAND** (SW): Olive gray (5Y 4/1), medium dense, medium grained sand, wet.
☒	6	12	CMSS									100			
☒	6	13	CMSS						5						
☒	4	5	CMSS												
■	6	5	CMSS	▽								100			
☒	6	3	CMSS						6						
☒	3	1	CMSS												
☒	6	1	CMSS			No	No	4.5	7					100	**CLAY** (CH): Light olive gray (5Y 5/2), stiff, wet, plastic, with some roots.
☒	6	3	CMSS												
☒	6	2	CMSS						8						
☒	6	2	CMSS					3.0			100				**ORGANIC SOIL** (OL): peat yellowish brown [10YR 5/4], firm, saturated.
☒	6	5	CMSS					2.5	9						**CLAY** (CH): Olive gray [5Y 5/2], firm, wet, abundent roots and grass, medium plasticity.
☒	6	4	CMSS										40	60	
☒	6	7	CMSS						10						
■	6	7	CMSS					1.0				95		5	**SAND** (SW): Olive gray (5Y 3/2), fine grained sand, loose, saturated.
☒	6	3	CMSS						11						
☒	6	5	CMSS												

SCS ENGINEERS
Environmental Consultants
434 7th Street, Suite B
Eureka, California 95501-1803
Ph.: 707-476-1590 Fax: 707-476-1589

BORING LOG MW-12

Schmidbauer Lumber
1099 Waterfront Drive
Eureka, California 95501
Job Number: 01203316.00

Figure:
Appendix A
MW-12

SCS-SANTA ROSA BORING LOG 01203316.00.GPJ SCS-SANTA ROSA.GDT 11/22/05

Sample	Inches Recovered	Blows / 6 in	Sampler Type	Water Levels	PID (ppm)	Odor	Discoloration	Elevation	Depth in Feet	Graphic Log	Gravel %	Sand %	Silt %	Clay %	Lithologic Description and Drilling Comments:
	6	7										95	5		
	4	4							13						
	6	4	CMSS					-1.8							**SAND with Silt** (SW-SM): Olive gray (5Y 3/2), medium dense, saturated, no plasticity.
	6	11				No	No		14			85	15		
								-3.1							**CLAYEY SAND** (SC): Dark gray [N4] and Dark reddish gray [5YR 4/2], well graded, loose, saturated, no plasticity, mottled.
	6	3							15						
	6	3	CMSS					-3.7				60		40	**CLAYEY SAND** (SC): Dark gray [N4], loose, saturated, no plasticity.
	6	7						-4.5	16			80		20	

TOTAL DEPTH = 16.0 FEET

17 18 19 20 21 22 23 24 25 26 27

SCS-SANTA ROSA BORING LOG 01203316.00.GPJ SCS-SANTA ROSA.GDT 11/22/05

SCS ENGINEERS

Environmental Consultants
434 7th Street, Suite B
Eureka, California 95501-1803
Ph.: 707-476-1590 Fax: 707-476-1589

BORING LOG MW-12

Schmidbauer Lumber
1099 Waterfront Drive
Eureka, California 95501
Job Number: 01203316.00

Figure:
Appendix A
MW-12

Date (start, end): 9/20/05 - 9/20/05
Drilling Time (start, end) 11:00 - 12:05
Logged By: Karin W. Fresnel
Checked By:

Boring No.
MW-13

Boring Location: Btwn breakroom & hog fuel bin

See Unified Soil Classification System (USCS) for Legend and information not noted.

Drilling Contractor: Clear Heart Drilling, Inc.
Driller's Name: Pablo Trejo Gonzalas
Drilling Method: 8-in Hollow-Stem Auger
Sampling Method: CMSS
Hammer weight / fall: 140 lbs / 30 inch
Notes: Continuous core from 2.0 feet

MW Installed: Y ☒ N ☐ if no, boring backfilled with:
Cement ☐ Bentonite: Cement ☐ Grout ☐ Chips ☐
Auger Depth, ft: 15.0 Total Depth, ft: 16.5

Sample	Inches Recovered	Blows / 6 in	Sampler Type	Water Levels	PID (ppm)	Odor	Discoloration	Elevation	Depth in Feet	Graphic Log	Gravel %	Sand %	Silt %	Clay %	Lithologic Description and Drilling Comments:
								11.5							
								11.0							**ASPHALT**.
									1		30	10	30	30	**FILL**: base rock with clay, silt and cobbles, moist.
									2						
	4	14	CMSS					9.2							**SAND** (SW): Olive gray [5Y 5/2], medium grained sand, dense, moist, no plasticity.
	6	18							3			100			
	5	20													
	4	8	CMSS					7.5	4			95	5		**SAND** (SW): Dark greenish gray [5GY 4/1], fine grained sand, medium dense, wet, with shells.
	6	12													
	6	14							5						
	3	4	CMSS	▽											
	6	5							6						
	6	5													
	4	1	CMSS			No	No		7						Saturated.
	6	1													
	6	1							8						
	3	2	CMSS					3.0							**ORGANIC SOIL** (OL): wet, abundent roots (Peat) soft, medium plasticity.
	6	2						2.5	9			5	25	70	**CLAY** (CH): Dark greenish gray [5G 4/1], soft, high plasticity, abundent roots and grass.
	6	3						2.0							
	4	5	CMSS						10						**SAND** (SW): Dark greenish gray (5GY 4/1), fine grained sand, medium dense, saturated, no plasticity.
	6	7													
	6	8							11			95	5		
	4	5	CMSS												
	6	9													

SCS ENGINEERS
Environmental Consultants
434 7th Street, Suite B
Eureka, California 95501-1803
Ph.: 707-476-1590 Fax: 707-476-1589

BORING LOG MW-13

Schmidbauer Lumber
1099 Waterfront Drive
Eureka, California 95501
Job Number: 01203316.00

Figure:
Appendix A
MW-13

SCS-SANTA ROSA BORING LOG 01203316.00.GPJ SCS-SANTA ROSA.GDT 11/22/05

Sample	Inches Recovered	Blows / 6 in	Sampler Type	Water Levels	PID (ppm)	Odor	Discoloration	Elevation	Depth in Feet	Graphic Log	Gravel %	Sand %	Silt %	Clay %	Lithologic Description and Drilling Comments:
X	6	15						-0.5				5	25	70	**CLAY** (CH): Olive gray [5Y 5/2], loose, wet, high plasticity.
X	6	5	CMSS					-1.0				80	20		**SILTY SAND** (SM): Dark greenish gray (5GY 4/1), fine grained sand, saturated.
X	6	16	CMSS					-1.5	13						**SAND** (SW): Dark greenish gray (5GY 4/1), fine grained sand, medium dense, saturated, no plasticity.
X	6	20	CMSS									100			
X	6	16	CMSS			No	No		14						
X	6	16	CMSS												
X	6	6	CMSS						15						
X	6	15	CMSS					-4.5	16						
X	6	17	CMSS					-5.0				90	10		**SAND with Silt** (SW-SM): Dark greenish gray (5GY 4/1), medium dense, saturated.
									17						TOTAL DEPTH = 16.5 FEET
									18						
									19						
									20						
									21						
									22						
									23						
									24						
									25						
									26						
									27						

SCS ENGINEERS

Environmental Consultants
434 7th Street, Suite B
Eureka, California 95501-1803
Ph.: 707-476-1590 Fax: 707-476-1589

BORING LOG MW-13

Schmidbauer Lumber
1099 Waterfront Drive
Eureka, California 95501
Job Number: 01203316.00

Figure:
Appendix A
MW-13

SCS-SANTA ROSA BORING LOG 01203316.00.GPJ SCS-SANTA ROSA.GDT 11/22/05

Appendix B:
Well Completion Diagrams

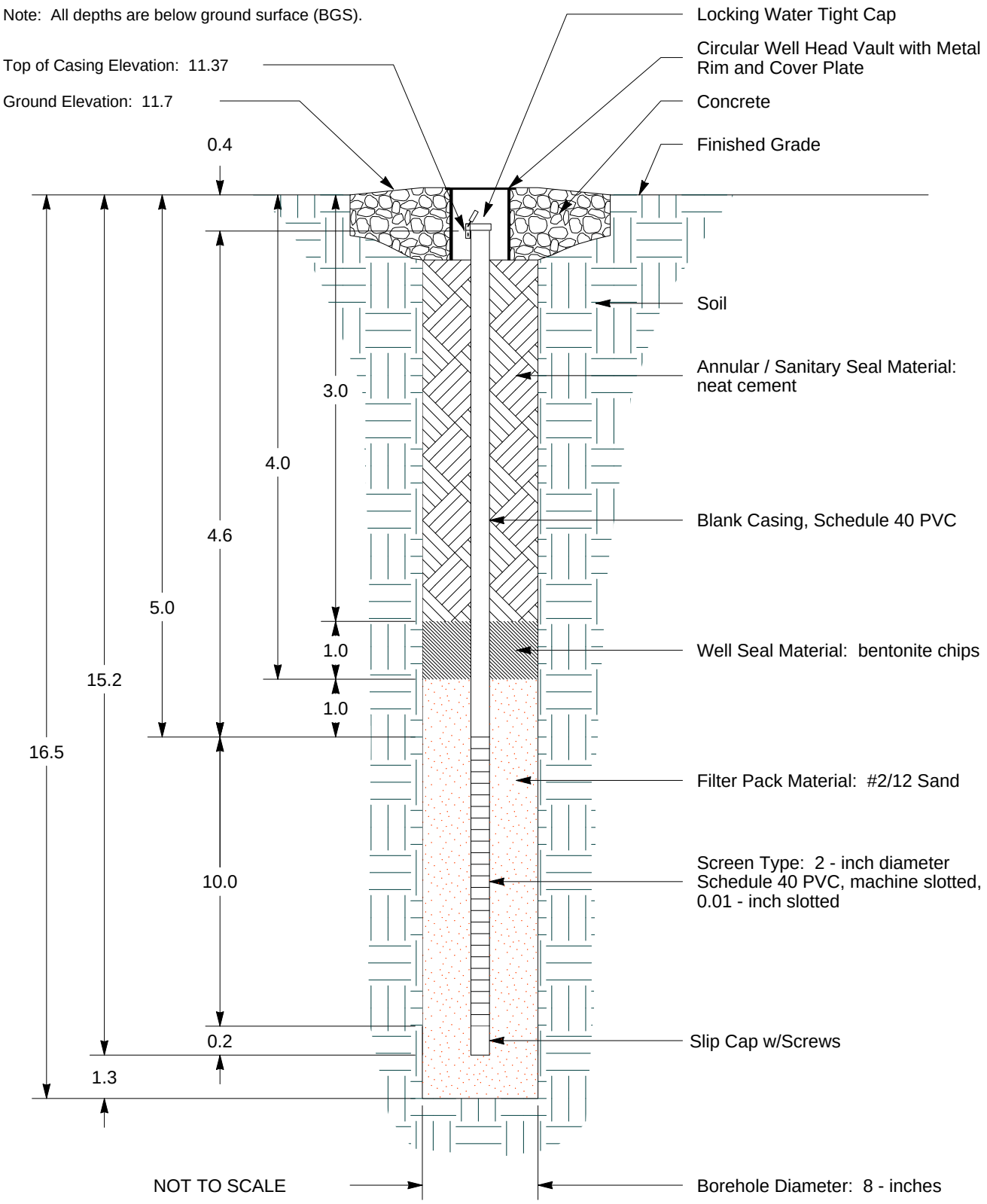

SCS ENGINEERS

Environmental Consultants
3645 Westwind Boulevard
Santa Rosa, California 95403
Ph.: 707-546-9461 Fax: 707-544-5769

WELL COMPLETION DIAGRAM FOR MW-10

Schmidbauer Lumber
1099 Waterfront Drive
Eureka, California 95501
Job Number: 01203316.00

Figure:

Appendix B
MW-10

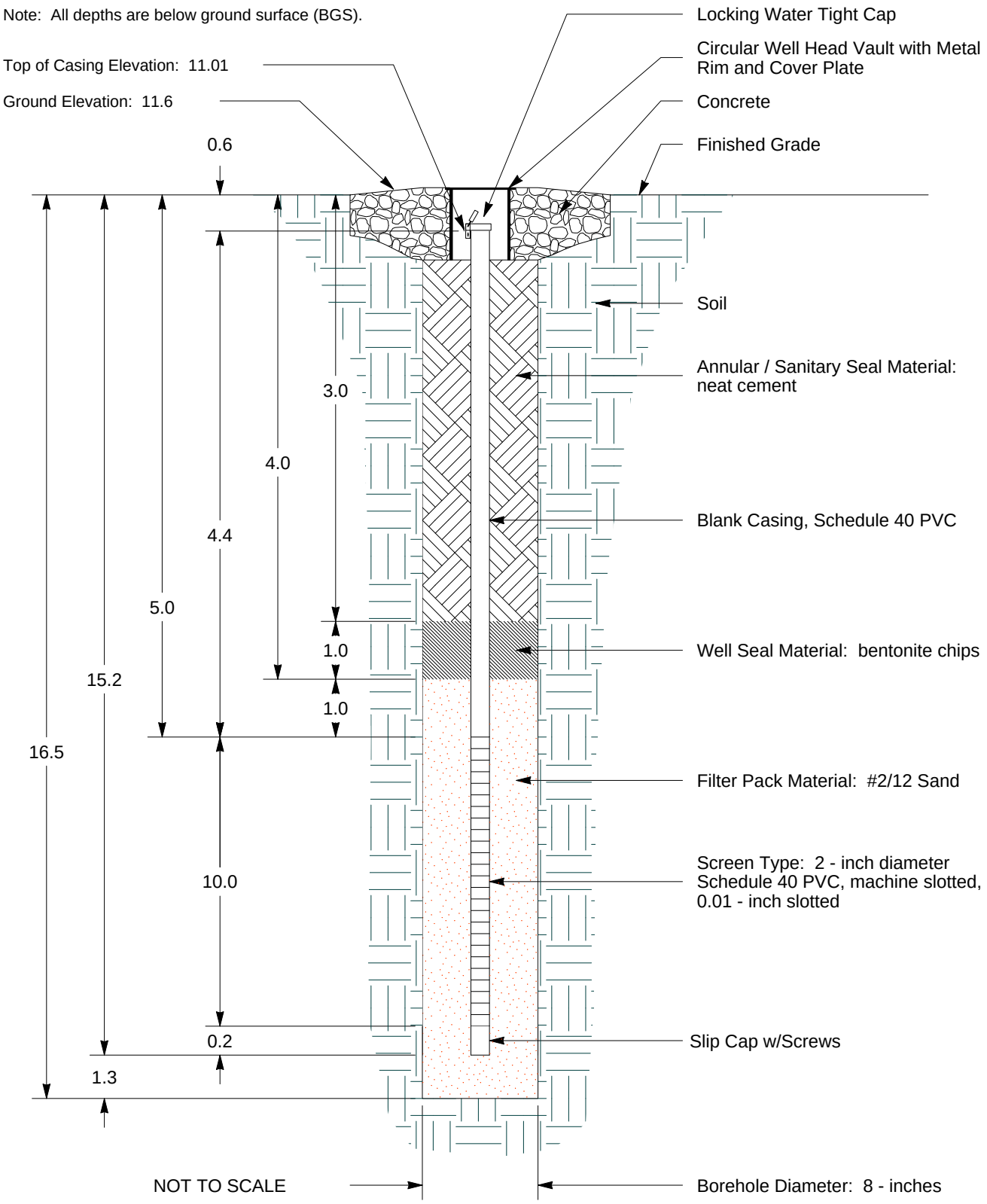

SCS ENGINEERS

Environmental Consultants
3645 Westwind Boulevard
Santa Rosa, California 95403
Ph.: 707-546-9461 Fax: 707-544-5769

WELL COMPLETION DIAGRAM FOR MW-11

Schmidbauer Lumber
1099 Waterfront Drive
Eureka, California 95501
Job Number: 01203316.00

Figure:

Appendix B
MW-11

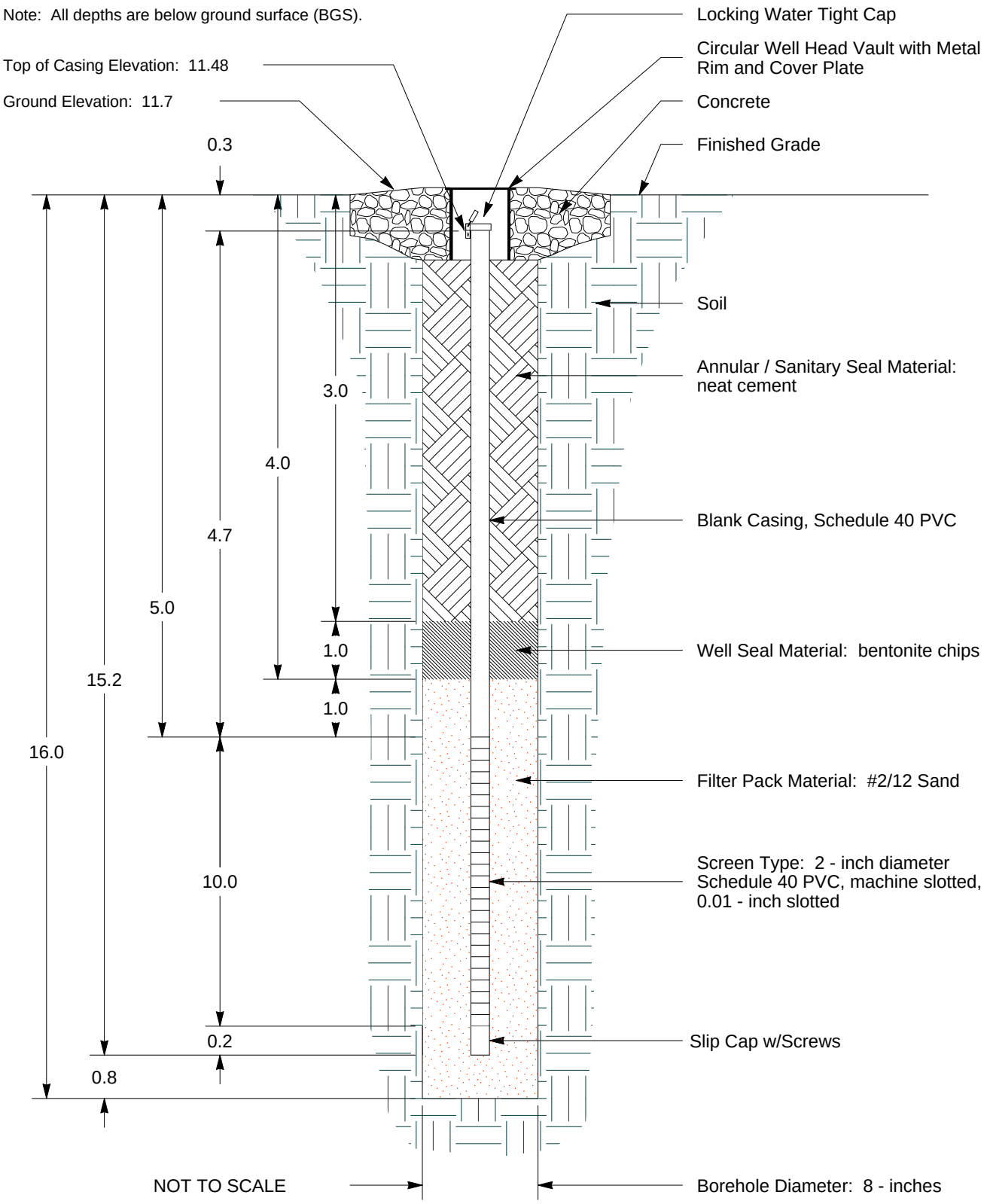

SCS ENGINEERS

Environmental Consultants
3645 Westwind Boulevard
Santa Rosa, California 95403
Ph.: 707-546-9461 Fax: 707-544-5769

WELL COMPLETION DIAGRAM FOR MW-12

Schmidbauer Lumber
1099 Waterfront Drive
Eureka, California 95501
Job Number: 01203316.00

Figure:

Appendix B
MW-12

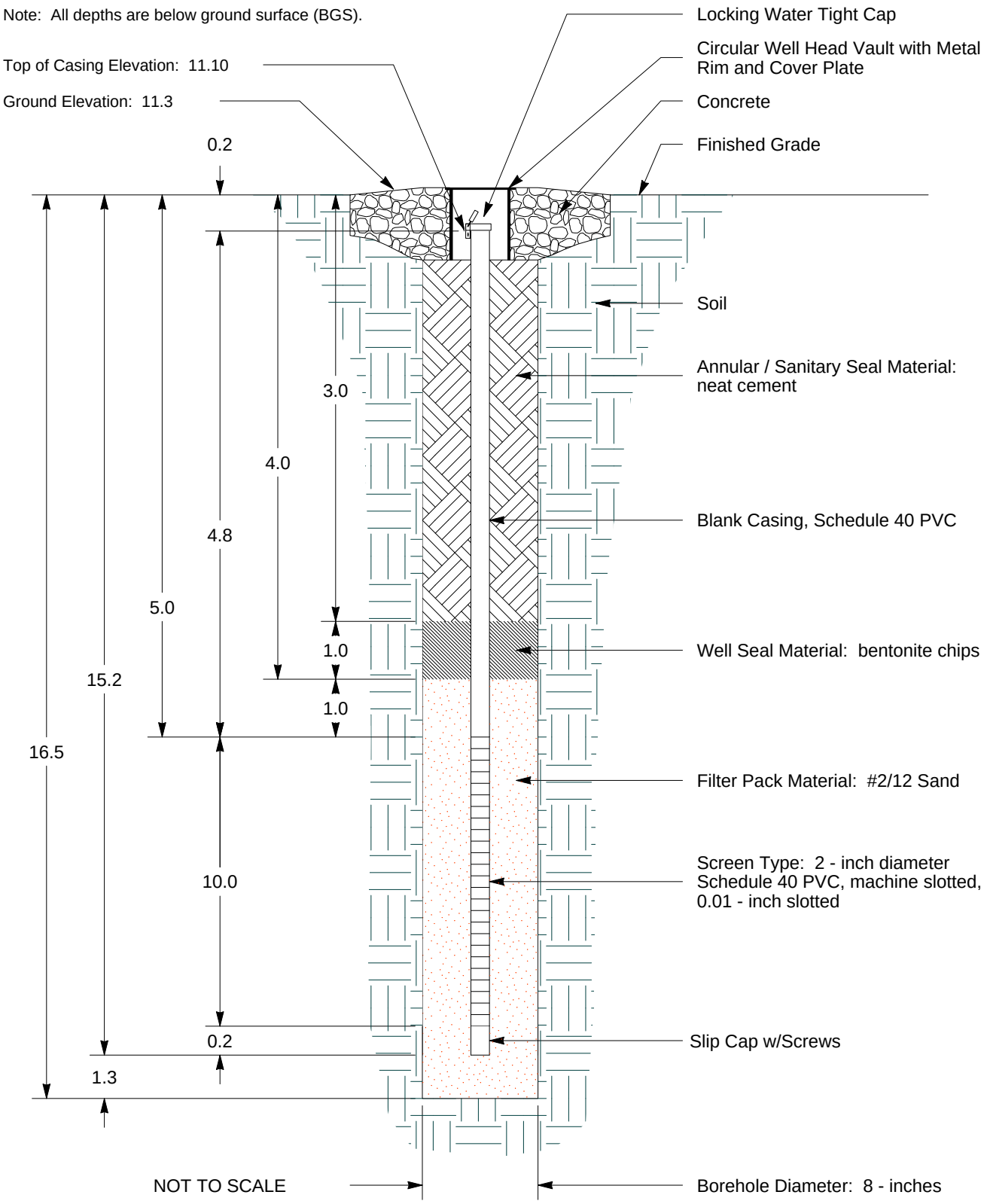

SCS ENGINEERS

Environmental Consultants
3645 Westwind Boulevard
Santa Rosa, California 95403
Ph.: 707-546-9461 Fax: 707-544-5769

WELL COMPLETION DIAGRAM FOR MW-13

Schmidbauer Lumber
1099 Waterfront Drive
Eureka, California 95501
Job Number: 01203316.00

Figure:

Appendix B
MW-13

Appendix C:
DWR Well Completion Reports

ORIGINAL
File with DWR

Page 1 of 1

STATE OF CALIFORNIA
WELL COMPLETION REPORT
Refer to Instruction Pamphlet

No. **1072857**

DWR USE ONLY - DO NOT FILL IN
STATE WELL NO./STATION NO.
LATITUDE LONGITUDE
APN/TRS/OTHER

Owner's Well No. MW-10
Date Work Began 09/19/05 Ended 09/19/05
Local Permit Agency Humboldt County Division of Enviromental Health
Permit No. 1512-F Permit Date 09/13/05

GEOLOGIC LOG

ORIENTATION (✓) ✓ VERTICAL ___ HORIZONTAL ___ ANGLE ___ (SPECIFY)
DRILLING METHOD Hollow-Stem Auger FLUID n.a.

DEPTH FROM SURFACE Ft.	to Ft.	DESCRIPTION *Describe material, grain size, color, etc.*
0	0.3	**ASPHALT.**
0.3	1.5	Baserock (FILL)
1.5	4.5	**SAND** (SW): Dark greenish gray [5GY 4/1], fine grained sand, moist.
4.2		Wet.
4.5	5.75	**SILTY SAND** (SM): Very dark gray [N3], fine grained sand, wet.
5.75	8.5	**SAND** (SW): Grayish black (N2), fine grained sand, saturated.
8.5	9.25	**CLAY** (CH): Brownish gray (5YR 4/1), saturated.
9.25	11.2	**SAND with Silt** (SW-SM): Grayish black (N2), wet.
11.2	11.8	**CLAYEY SAND** (SC): Greenish black (5G 2/1), fine grained sand, wet.
11.8	16.5	**SAND with Silt** (SW-SM): Dark greenish gray (5G 4/1), fine grained sand, saturated.

TOTAL DEPTH OF BORING 16.5 (Feet)
TOTAL DEPTH OF COMPLETED WELL 15.2 (Feet)

WELL OWNER

Name Rich Graham
Mailing Address P.O. Box 152
Eureka (CITY) CA (STATE) 95502 (ZIP)

WELL LOCATION

Address 1099 Waterfront Drive
City Eureka
County Humboldt
APN Book 003 Page 072 Parcel 004
Township ___ Range ___ Section ___
Latitude ___ DEG. ___ MIN. ___ SEC. NORTH Longitude ___ DEG. ___ MIN. ___ SEC. WEST

LOCATION SKETCH

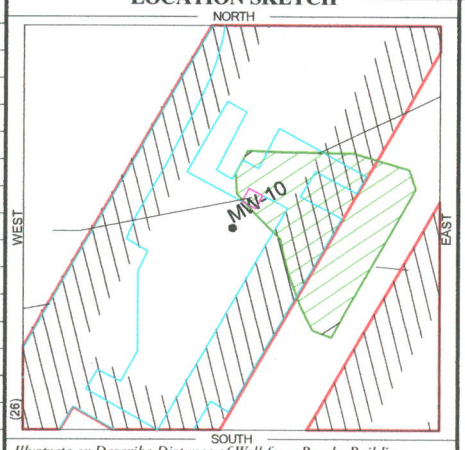

Illustrate or Describe Distance of Well from Roads, Buildings, Fences, Rivers, etc. and attach a map. Use additional paper if necessary. ***PLEASE BE ACCURATE & COMPLETE.***

ACTIVITY (✓)

✓ NEW WELL
MODIFICATION/REPAIR
___ Deepen
___ Other (Specify)
___ DESTROY *(Describe Procedures and Materials Under "GEOLOGIC LOG")*

PLANNED USES (✓)

WATER SUPPLY
___ Domestic ___ Public
___ Irrigation ___ Industrial
MONITORING ✓
TEST WELL ___
CATHODIC PROTECTION ___
HEAT EXCHANGE ___
DIRECT PUSH ___
INJECTION ___
VAPOR EXTRACTOR ___
SPARGING ___
REMEDIATION ___
OTHER (SPECIFY) ___

WATER LEVEL & YIELD OF COMPLETED WELL

DEPTH TO FIRST WATER 6.5 (Ft.) BELOW SURFACE
DEPTH OF STATIC WATER LEVEL n.a. (Ft.) & DATE MEASURED n.a.
ESTIMATED YIELD * n.a. (GPM) & TEST TYPE n.a.
TEST LENGTH n.a. (Hrs.) TOTAL DRAWDOWN n.a. (Ft.)
** May not be representative of a well's long-term yield.*

CASING (S)

DEPTH FROM SURFACE Ft.	to Ft.	BORE-HOLE DIA. (inches)	TYPE (✓) BLANK	SCREEN	CON-DUCTOR	FILL PIPE	MATERIAL / GRADE	INTERNAL DIAMETER (inches)	GAUGE OR WALL THICKNESS	SLOT SIZE IF ANY (inches)
-	-	-					-	-		
0.4	5.0	8	✓				PVC	2	0.25	
5.0	15.0	8		✓			PVC	2	0.25	0.01
15.0	15.2	8	✓				PVC	2	0.25	

ANNULAR MATERIAL

DEPTH FROM SURFACE Ft.	to Ft.	TYPE CE-MENT (✓)	BEN-TONITE (✓)	FILL (✓)	FILTER PACK (TYPE/SIZE)
0	3.0	✓			
3.0	4.0		✓		
4.0	16.5			✓	#2/12 Sand

ATTACHMENTS (✓)

___ Geologic Log
___ Well Construction Diagram
___ Geophysical Log(s)
___ Soil/Water Chemical Analyses
___ Other ___

ATTACH ADDITIONAL INFORMATION, IF IT EXISTS.

CERTIFICATION STATEMENT

I, the undersigned, certify that this report is complete and accurate to the best of my knowledge and belief.

NAME SCS Engineers (PERSON, FIRM, OR CORPORATION (TYPED OR PRINTED))
434 7th Street, Suite B (ADDRESS) Eureka (CITY) California (STATE) 95501 (ZIP)
Signed [signature] (WELL DRILLER/AUTHORIZED REPRESENTATIVE) 1/3/06 (DATE SIGNED) 780357 (C-57 LICENSE NUMBER)

IF ADDITIONAL SPACE IS NEEDED, USE NEXT CONSECUTIVELY NUMBERED FORM

ORIGINAL
File with DWR

Page 1 of 1

STATE OF CALIFORNIA
WELL COMPLETION REPORT
Refer to Instruction Pamphlet

No. **1072858**

DWR USE ONLY - DO NOT FILL IN
STATE WELL NO./STATION NO.
LATITUDE LONGITUDE
APN/TRS/OTHER

Owner's Well No. MW-11
Date Work Began 09/19/05 Ended 09/19/05
Local Permit Agency Humboldt County Division of Enviromental Health
Permit No. 1512-F Permit Date 09/19/05

GEOLOGIC LOG

ORIENTATION (✓) ✓ VERTICAL ___ HORIZONTAL ___ ANGLE ___ (SPECIFY)

DRILLING METHOD Hollow-Stem Auger FLUID n.a.

DEPTH FROM SURFACE Ft.	to Ft.	DESCRIPTION *Describe material, grain size, color, etc.*
0	0.25	**ASPHALT**.
0.25	1.5	**FILL**.
1.5	8.25	**SAND** (SW): Medium light gray (N6), moist.
4.7		Grayish black (N2), saturated.
6.5		Medium dark gray (N4), wet.
8.25	12.25	**SAND** (SP): Dark gray [N4], fine grained sand, saturated.
12.25	13.25	**CLAYEY SAND** (SC): Greenish black (5G 2/1), fine grained sand, saturated.
13.25	16.5	**SAND** (SP): Grayish black (N2), fine grained sand, saturated.

TOTAL DEPTH OF BORING 16.5 (Feet)
TOTAL DEPTH OF COMPLETED WELL 15.2 (Feet)

WELL OWNER

Name Rich Graham
Mailing Address P.O. Box 152
Eureka (CITY) CA (STATE) 95502 (ZIP)

WELL LOCATION

Address 1099 Waterfront Drive
City Eureka
County Humboldt
APN Book 003 Page 072 Parcel 004
Township ___ Range ___ Section ___
Latitude ___ DEG. ___ MIN. ___ SEC. NORTH Longitude ___ DEG. ___ MIN. ___ SEC. WEST

LOCATION SKETCH

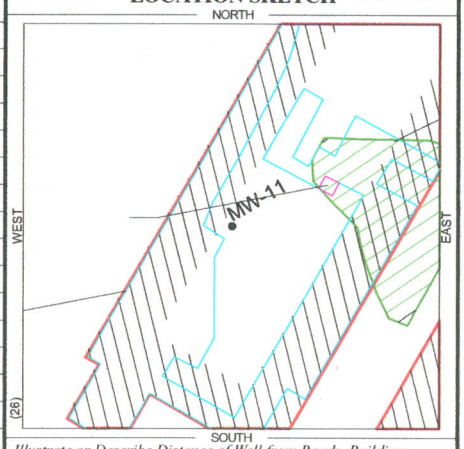

Illustrate or Describe Distance of Well from Roads, Buildings, Fences, Rivers, etc. and attach a map. Use additional paper if necessary. ***PLEASE BE ACCURATE & COMPLETE.***

ACTIVITY (✓)

✓ NEW WELL
MODIFICATION/REPAIR
___ Deepen
___ Other (Specify)
___ DESTROY *(Describe Procedures and Materials Under "GEOLOGIC LOG")*

PLANNED USES (✓)

WATER SUPPLY
___ Domestic ___ Public
___ Irrigation ___ Industrial
MONITORING ✓
TEST WELL ___
CATHODIC PROTECTION ___
HEAT EXCHANGE ___
DIRECT PUSH ___
INJECTION ___
VAPOR EXTRACTOR ___
SPARGING ___
REMEDIATION ___
OTHER (SPECIFY) ___

WATER LEVEL & YIELD OF COMPLETED WELL

DEPTH TO FIRST WATER 5 (Ft.) BELOW SURFACE
DEPTH OF STATIC WATER LEVEL n.a. (Ft.) & DATE MEASURED n.a.
ESTIMATED YIELD * n.a. (GPM) & TEST TYPE n.a.
TEST LENGTH n.a. (Hrs.) TOTAL DRAWDOWN n.a. (Ft.)
** May not be representative of a well's long-term yield.*

CASING (S)

DEPTH FROM SURFACE Ft.	to Ft.	BORE-HOLE DIA. (inches)	TYPE (✓) BLANK	SCREEN	CON-DUCTOR	FILL PIPE	MATERIAL / GRADE	INTERNAL DIAMETER (inches)	GAUGE OR WALL THICKNESS	SLOT SIZE IF ANY (inches)
-	-	-					-	-		
0.6	5.0	8	✓				PVC	2	0.25	
5.0	15.0	8		✓			PVC	2	0.25	0.01
15.0	15.2	8	✓				PVC	2	0.25	

ANNULAR MATERIAL

DEPTH FROM SURFACE Ft.	to Ft.	TYPE CE-MENT (✓)	BEN-TONITE (✓)	FILL (✓)	FILTER PACK (TYPE/SIZE)
0	3.0	✓			
3.0	4.0		✓		
4.0	16.5			✓	#2/12 Sand

ATTACHMENTS (✓)

___ Geologic Log
___ Well Construction Diagram
___ Geophysical Log(s)
___ Soil/Water Chemical Analyses
___ Other ___

ATTACH ADDITIONAL INFORMATION, IF IT EXISTS.

CERTIFICATION STATEMENT

I, the undersigned, certify that this report is complete and accurate to the best of my knowledge and belief.

NAME SCS Engineers (PERSON, FIRM, OR CORPORATION (TYPED OR PRINTED))
434 7th Street, Suite B (ADDRESS) Eureka (CITY) California (STATE) 95501 (ZIP)
Signed ___ (WELL DRILLER/AUTHORIZED REPRESENTATIVE) 1/31/06 (DATE SIGNED) 780357 (C-57 LICENSE NUMBER)

IF ADDITIONAL SPACE IS NEEDED, USE NEXT CONSECUTIVELY NUMBERED FORM

ORIGINAL
File with DWR

Page 1 of 1

STATE OF CALIFORNIA
WELL COMPLETION REPORT
Refer to Instruction Pamphlet

No. **1072859**

DWR USE ONLY - DO NOT FILL IN
STATE WELL NO./STATION NO.
LATITUDE LONGITUDE
APN/TRS/OTHER

Owner's Well No. MW-12
Date Work Began 09/20/05 Ended 09/20/05
Local Permit Agency Humboldt County Division of Enviromental Health
Permit No. 1512-F Permit Date 09/19/05

GEOLOGIC LOG

ORIENTATION (✓) ✓ VERTICAL ___ HORIZONTAL ___ ANGLE ___ (SPECIFY)

DRILLING METHOD Hollow-Stem Auger FLUID n.a.

DEPTH FROM SURFACE Ft.	to Ft.	DESCRIPTION *Describe material, grain size, color, etc.*
0	1	**ASPHALT.**
1	1.5	**FILL.**
1.5	2.5	**SANDY SILT** (ML): Light olive gray (5Y 6/1) and moderate olive brown [5Y 4/4], fine grained sand, moist.
2.5	3.5	**SAND** (SW): Moderate olive brown (5Y 4/4), medium grained sand, moist.
3.5	4	**SILT** (ML): Dark greenish gray [5G 4/1] Light brownish gray [10YR 6/2], fine grained sand, moist.
4	7	**SAND** (SW): Olive gray (5Y 4/1).
7	8.5	**CLAY** (CH): Light olive gray (5Y 5/2), wet.
8.5	9	**ORGANIC SOIL** (OL): peat yellowish brown [10YR 5/4], saturated.
9	10.5	**CLAY** (CH): Olive gray [5Y 5/2], wet.
10.5	13.25	**SAND** (SW): Olive gray (5Y 3/2), fine grained sand, saturated.
13.25	14.55	**SAND with Silt** (SW-SM): Olive gray (5Y 3/2), saturated.
14.55	16	**CLAYEY SAND** (SC): Dark gray [N4] mottled with Dark reddish gray [5YR 4/2], saturated.
15.2		Dark gray [N4].

TOTAL DEPTH OF BORING 16 (Feet)
TOTAL DEPTH OF COMPLETED WELL 15.2 (Feet)

WELL OWNER

Name Rich Graham
Mailing Address P.O. Box 152
Eureka (CITY) CA (STATE) 95502 (ZIP)

WELL LOCATION

Address 1099 Waterfront Drive
City Eureka
County Humboldt
APN Book 003 Page 072 Parcel 004
Township ___ Range ___ Section ___
Latitude ___ DEG. ___ MIN. ___ SEC. NORTH Longitude ___ DEG. ___ MIN. ___ SEC. WEST

LOCATION SKETCH

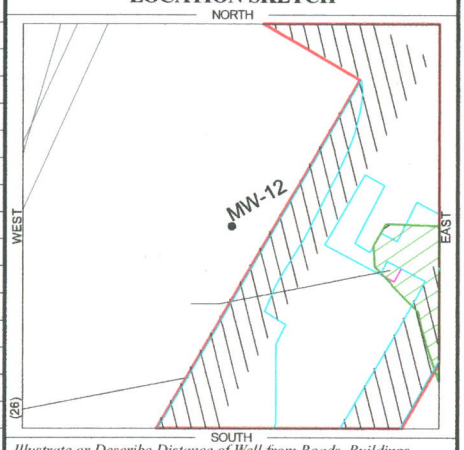

Illustrate or Describe Distance of Well from Roads, Buildings, Fences, Rivers, etc. and attach a map. Use additional paper if necessary. ***PLEASE BE ACCURATE & COMPLETE.***

ACTIVITY (✓)

✓ NEW WELL
MODIFICATION/REPAIR
___ Deepen
___ Other (Specify)
___ DESTROY *(Describe Procedures and Materials Under "GEOLOGIC LOG")*

PLANNED USES (✓)

WATER SUPPLY
___ Domestic ___ Public
___ Irrigation ___ Industrial
MONITORING ✓
TEST WELL ___
CATHODIC PROTECTION ___
HEAT EXCHANGE ___
DIRECT PUSH ___
INJECTION ___
VAPOR EXTRACTOR ___
SPARGING ___
REMEDIATION ___
OTHER (SPECIFY) ___

WATER LEVEL & YIELD OF COMPLETED WELL

DEPTH TO FIRST WATER 6 (Ft.) BELOW SURFACE
DEPTH OF STATIC WATER LEVEL n.a. (Ft.) & DATE MEASURED n.a.
ESTIMATED YIELD * n.a. (GPM) & TEST TYPE n.a.
TEST LENGTH n.a. (Hrs.) TOTAL DRAWDOWN n.a. (Ft.)
** May not be representative of a well's long-term yield.*

CASING (S)

DEPTH FROM SURFACE Ft.	to Ft.	BORE-HOLE DIA. (inches)	TYPE (✓) BLANK	SCREEN	CON-DUCTOR	FILL PIPE	MATERIAL / GRADE	INTERNAL DIAMETER (inches)	GAUGE OR WALL THICKNESS	SLOT SIZE IF ANY (inches)
-	-	-					-	-		
0.3	5.0	8	✓				PVC	2	0.25	
5.0	15.0	8		✓			PVC	2	0.25	0.01
15.0	15.2	8	✓				PVC	2	0.25	

ANNULAR MATERIAL

DEPTH FROM SURFACE Ft.	to Ft.	TYPE CE-MENT (✓)	BEN-TONITE (✓)	FILL (✓)	FILTER PACK (TYPE/SIZE)
0	3.0	✓			
3.0	4.0		✓		
4.0	16.0			✓	#2/12 Sand

ATTACHMENTS (✓)

___ Geologic Log
___ Well Construction Diagram
___ Geophysical Log(s)
___ Soil/Water Chemical Analyses
___ Other ___

ATTACH ADDITIONAL INFORMATION, IF IT EXISTS.

CERTIFICATION STATEMENT

I, the undersigned, certify that this report is complete and accurate to the best of my knowledge and belief.

NAME SCS Engineers (PERSON, FIRM, OR CORPORATION (TYPED OR PRINTED))
ADDRESS 434 7th Street, Suite B CITY Eureka STATE California ZIP 95501
Signed ___ (WELL DRILLER/AUTHORIZED REPRESENTATIVE) DATE SIGNED 1/31/06 C-57 LICENSE NUMBER 780357

IF ADDITIONAL SPACE IS NEEDED, USE NEXT CONSECUTIVELY NUMBERED FORM

ORIGINAL
File with DWR

Page 1 of 1

STATE OF CALIFORNIA
WELL COMPLETION REPORT
Refer to Instruction Pamphlet

No. **1072860**

DWR USE ONLY - DO NOT FILL IN
STATE WELL NO./STATION NO.
LATITUDE LONGITUDE
APN/TRS/OTHER

Owner's Well No. MW-13
Date Work Began 09/20/05 Ended 09/20/05
Local Permit Agency Humboldt County Division of Enviromental Health
Permit No. 1512-F Permit Date 09/19/05

GEOLOGIC LOG

ORIENTATION (✓) ✓ VERTICAL ___ HORIZONTAL ___ ANGLE ___ (SPECIFY)
DRILLING METHOD Hollow-Stem Auger FLUID n.a.

DEPTH FROM SURFACE Ft.	to Ft.	DESCRIPTION *Describe material, grain size, color, etc.*
0	0.5	**ASPHALT**.
0.5	2.3	**FILL**.
2.3	4	**SAND** (SW): Olive gray [5Y 5/2], medium grained sand, moist.
4	8.5	**SAND** (SW): Dark greenish gray [5GY 4/1], fine grained sand, wet.
6.5		Saturated.
8.5	9	**ORGANIC SOIL** (OL): wet.
9	9.5	**CLAY** (CH): Dark greenish gray [5G 4/1].
9.5	12	**SAND** (SW): Dark greenish gray (5GY 4/1), fine grained sand, saturated.
12	12.5	**CLAY** (CH): Olive gray [5Y 5/2], wet.
12.5	13	**SILTY SAND** (SM): Dark greenish gray (5GY 4/1), fine grained sand, saturated.
13	16	**SAND** (SW): Dark greenish gray (5GY 4/1), fine grained sand, saturated.
16	16.5	**SAND with Silt** (SW-SM): Dark greenish gray (5GY 4/1), saturated.

TOTAL DEPTH OF BORING 16.5 (Feet)
TOTAL DEPTH OF COMPLETED WELL 15.2 (Feet)

WELL OWNER

Name Rich Graham
Mailing Address P.O. Box 152
Eureka (CITY) CA (STATE) 95502 (ZIP)

WELL LOCATION

Address 1099 Waterfront Drive
City Eureka
County Humboldt
APN Book 003 Page 072 Parcel 004
Township ___ Range ___ Section ___
Latitude ___ DEG. ___ MIN. ___ SEC. NORTH Longitude ___ DEG. ___ MIN. ___ SEC. WEST

LOCATION SKETCH

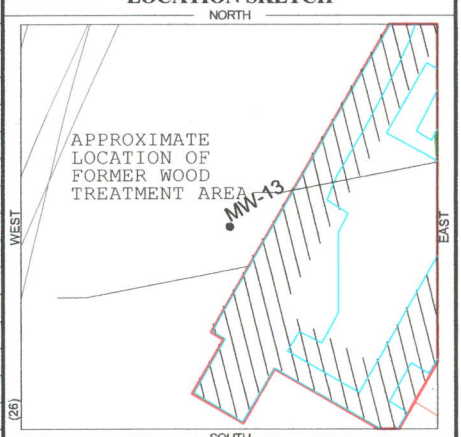

Illustrate or Describe Distance of Well from Roads, Buildings, Fences, Rivers, etc. and attach a map. Use additional paper if necessary. ***PLEASE BE ACCURATE & COMPLETE.***

ACTIVITY (✓)

✓ NEW WELL
MODIFICATION/REPAIR
___ Deepen
___ Other (Specify)
___ DESTROY *(Describe Procedures and Materials Under "GEOLOGIC LOG")*

PLANNED USES (✓)

WATER SUPPLY
___ Domestic ___ Public
___ Irrigation ___ Industrial
MONITORING ✓
TEST WELL ___
CATHODIC PROTECTION ___
HEAT EXCHANGE ___
DIRECT PUSH ___
INJECTION ___
VAPOR EXTRACTOR ___
SPARGING ___
REMEDIATION ___
OTHER (SPECIFY) ___

WATER LEVEL & YIELD OF COMPLETED WELL

DEPTH TO FIRST WATER 6 (Ft.) BELOW SURFACE
DEPTH OF STATIC WATER LEVEL n.a. (Ft.) & DATE MEASURED n.a.
ESTIMATED YIELD * n.a. (GPM) & TEST TYPE n.a.
TEST LENGTH n.a. (Hrs.) TOTAL DRAWDOWN n.a. (Ft.)
** May not be representative of a well's long-term yield.*

CASING (S)

DEPTH FROM SURFACE Ft.	to Ft.	BORE-HOLE DIA. (inches)	TYPE (✓) BLANK	SCREEN	CON-DUCTOR	FILL PIPE	MATERIAL / GRADE	INTERNAL DIAMETER (inches)	GAUGE OR WALL THICKNESS	SLOT SIZE IF ANY (inches)
-	-	-					-	-		
0.2	5.0	8	✓				PVC	2	0.25	
5.0	15.0	8		✓			PVC	2	0.25	0.01
15.0	15.2	8	✓				PVC	2	0.25	

ANNULAR MATERIAL

DEPTH FROM SURFACE Ft.	to Ft.	TYPE CE-MENT (✓)	BEN-TONITE (✓)	FILL (✓)	FILTER PACK (TYPE/SIZE)
0	3.0	✓			
3.0	4.0		✓		
4.0	16.5			✓	#2/12 Sand

ATTACHMENTS (✓)

___ Geologic Log
___ Well Construction Diagram
___ Geophysical Log(s)
___ Soil/Water Chemical Analyses
___ Other ___

ATTACH ADDITIONAL INFORMATION, IF IT EXISTS.

CERTIFICATION STATEMENT

I, the undersigned, certify that this report is complete and accurate to the best of my knowledge and belief.

NAME SCS Engineers (PERSON, FIRM, OR CORPORATION (TYPED OR PRINTED))
434 7th Street, Suite B (ADDRESS) Eureka (CITY) California (STATE) 95501 (ZIP)
Signed ___ (WELL DRILLER/AUTHORIZED REPRESENTATIVE) 1/3/06 (DATE SIGNED) 780357 (C-57 LICENSE NUMBER)

IF ADDITIONAL SPACE IS NEEDED, USE NEXT CONSECUTIVELY NUMBERED FORM

Appendix D:
Well Development Records:
12 October 2005

SCS ENGINEERS

WELL DEVELOPMENT RECORD

WELL NUMBER	PROJECT	JOB NUMBER	SITE	RECORDED BY
MW-10	Schmidbauer Lumber	01203316.00	1099 Waterfront Drive	Amy Yardley

PROJECT LOCATION	AIR TEMPERATURE	WEATHER	SUBCONTRACTOR
1099 Waterfront Drive Eureka, California		Overcast	None

METHOD

HAND PUMP (HP)	
SUBMERSIBLE PUMP (SP)	X
BAILER (B)	
SURGE BLOCK (SB)	X

DEVELOPMENT CRITERIA

Minimum of 4 well volumes or until discharge is clear and water characteristics have stabilized.

REMARKS

* Oil/water interface probe used to check for NAPLs. MLE- Meter Limit Exceeded (<999 ntu's).

HOLE DIAMETER	d_H	=	8.0
WELL CASING			
INSIDE DIAM	$d_W ID$	=	2.0
OUTSIDE DIAM	$d_W OD$	=	2.5
DEPTH TO:			
WATER LEVEL	h	=	3.94
BASE OF SEAL	S	=	4.0
BASE OF SCREEN	TD_S	=	15.0
BASE OF SUMP	TD_C	=	16.5
ESTIMATED FILTER PACK POROSITY	P	=	0.25

Diameters in (inches) : Depths in (feet)

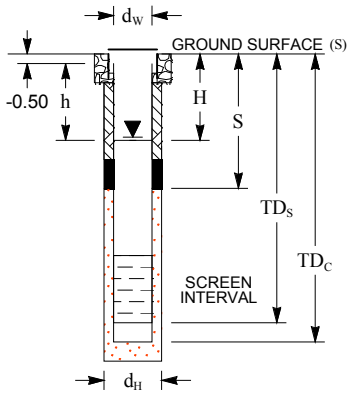

PURGE VOLUME CALCULATION

CASING VOLUME =

$$V_C = \pi \left(\frac{d_W ID}{2}\right)^2 (TD_C - H) = 3.14 \left(\frac{0.17}{2}\right)^2 (16.5 - 4.4)$$

$$= 0.26 \text{ ft}^3$$

FILTER PACK PORE VOLUME =

$$V_F = \pi \left[\left(\frac{d_H}{2}\right)^2 - \left(\frac{d_W OD}{2}\right)^2\right] (TD_s - (S \text{ or } H)^*)(P)$$

$$= 0.83 \text{ ft}^3$$

TOTAL WELL VOLUME =

$$V_T = V_C + V_F = 1.09 \text{ ft}^3 \times 7.48 \text{ gal/ft}^3 = 8.2 \text{ gal}$$

(* If S > H, use S; If S < H, use H)

DEVELOPMENT LOG					CUMULATIVE TOTAL REMOVED		WATER CHARACTERISTICS					COMMENTS
DATE	TIME BEGIN	TIME FINISH	METHOD	WATER REMOVED (GAL)	GAL	WELL VOLUMES	pH	CONDUCTIVITY (mmhos/cm)	TURBIDITY (NTU)	TEMPERATURE (°C)	DISSOLVED OXYGEN (ppm)	
10/12/05	15:40	15:50	SB	0	0	0.00	n.a.	n.a.	n.a.	n.a.	n.a.	Surged well
10/12/05	15:52	16:00	SP	10	10	1.22	6.53	1.01	*MLE	15	2.91	
10/12/05	16:00	16:07	SP	10	20	2.44	6.8	0.767	*MLE	14.9	3.09	
10/12/05	16:07	16:15	SP	5	25	3.05	6.82	0.747	*MLE	14.9	3.16	
10/12/05	16:15	16:20	SP	5	30	3.66	6.83	0.736	*MLE	14.9	2.73	
10/12/05	16:20	16:26	SP	5	35	4.27	6.84	0.718	721	14.9	3.54	
10/12/05	16:26	16:31	SP	5	40	4.89	6.85	0.718	522	14.9	2.88	
10/12/05	16:31	16:35	SP	3	43	5.25	6.82	0.712	325	14.9	2.75	
10/12/05	16:35	16:38	SP	3	46	5.62	6.82	0.712	251	14.9	2.63	
10/12/05	16:38	16:40	SP	2	48	5.86	6.81	0.71	185	14.9	2.56	
10/12/05	16:40	16:43	SP	2	50	6.11	6.81	0.71	204	14.9	3.07	

SCS ENGINEERS

WELL DEVELOPMENT RECORD

WELL NUMBER	PROJECT	JOB NUMBER	SITE	RECORDED BY
MW-11	Schmidbauer Lumber	01203316.00	1099 Waterfront Drive	Amy Yardley

PROJECT LOCATION	AIR TEMPERATURE	WEATHER	SUBCONTRACTOR
1099 Waterfront Drive Eureka, California		Overcast	None

METHOD	
HAND PUMP (HP)	
SUBMERSIBLE PUMP (SP)	X
BAILER (B)	
SURGE BLOCK (SB)	X

DEVELOPMENT CRITERIA

Minimum of 4 well volumes or until discharge is clear and water characteristics have stabilized.

REMARKS

*** Oil/water interface probe used to check for NAPLs. MLE- Meter Limit Exceeded (<999 ntu's).**

HOLE DIAMETER	d_H	=	8.0
WELL CASING			
INSIDE DIAM	$d_W ID$	=	2.0
OUTSIDE DIAM	$d_W OD$	=	2.5
DEPTH TO:			
WATER LEVEL	h	=	4.35
BASE OF SEAL	S	=	4.0
BASE OF SCREEN	TD_S	=	15.0
BASE OF SUMP	TD_C	=	16.5
ESTIMATED FILTER PACK POROSITY	P	=	0.25

Diameters in (inches) : Depths in (feet)

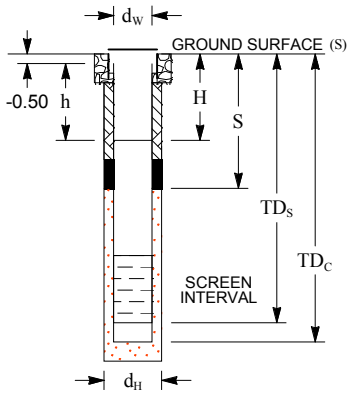

PURGE VOLUME CALCULATION

CASING VOLUME =

$$V_C = \pi \left(\frac{d_W ID}{2}\right)^2 (TD_C - H) = 3.14 \left(\frac{0.17}{2}\right)^2 (16.5 - 4.9)$$

$$= 0.25 \text{ ft}^3$$

FILTER PACK PORE VOLUME =

$$V_F = \pi \left[\left(\frac{d_H}{2}\right)^2 - \left(\frac{d_W OD}{2}\right)^2\right] (TD_s - (S \text{ or } H)^*)(P)$$

$$= 0.80 \text{ ft}^3$$

TOTAL WELL VOLUME =

$$V_T = V_C + V_F = 1.05 \text{ ft}^3 \times 7.48 \text{ gal/ft}^3 = 7.9 \text{ gal}$$

(* If S > H, use S; If S < H, use H)

DEVELOPMENT LOG					CUMULATIVE TOTAL REMOVED		WATER CHARACTERISTICS					COMMENTS
DATE	TIME BEGIN	TIME FINISH	METHOD	WATER REMOVED (GAL)	GAL	WELL VOLUMES	pH	CONDUCTIVITY (mmhos/cm)	TURBIDITY (NTU)	TEMPERATURE (°C)	DISSOLVED OXYGEN (ppm)	
10/12/05	15:25	15:55	SB	0	0	0.00	n.a.	n.a.	n.a.	n.a.	n.a.	Surged well
10/12/05	15:56	15:58	SP	1	1	0.13	7.3	1.17	*MLE	15.3	2.4	
10/12/05	15:58	16:05	SP	4	5	0.63	6.83	1.18	856	15.3	3.9	
10/12/05	16:05	16:10	SP	5	10	1.27	6.69	1.17	186	15.3	5.84	
10/12/05	16:10	16:15	SP	5	15	1.90	6.69	1.17	60	15.3	4.65	
10/12/05	16:15	16:20	SP	5	20	2.54	6.73	1.17	10	15.3	6.85	
10/12/05	16:20	16:25	SP	5	25	3.17	6.74	1.18	332	15.3	3.97	
10/12/05	16:25	16:30	SP	5	30	3.81	6.79	1.18	10	15.3	4.7	
10/12/05	16:30	16:35	SP	5	35	4.44	6.98	1.17	10	15.3	4.73	
10/12/05	16:35	16:40	SP	5	40	5.08	6.85	1.1	10	15.2	4.79	

SCS ENGINEERS

WELL DEVELOPMENT RECORD

WELL NUMBER	PROJECT	JOB NUMBER	SITE	RECORDED BY
MW-12	Schmidbauer Lumber	01203316.00	1099 Waterfront Drive	Amy Yardley

PROJECT LOCATION	AIR TEMPERATURE	WEATHER	SUBCONTRACTOR
1099 Waterfront Drive Eureka, California		Overcast	None

METHOD

HAND PUMP (HP) ____
SUBMERSIBLE PUMP (SP) X
BAILER (B) ____
SURGE BLOCK (SB) X

DEVELOPMENT CRITERIA

Minimum of 4 well volumes or until discharge is clear and water characteristics have stabilized.

REMARKS

*** Oil/water interface probe used to check for NAPLs. MLE- Meter Limit Exceeded (<999 ntu's).**

HOLE DIAMETER	d_H	=	8.0
WELL CASING			
INSIDE DIAM	$d_W ID$	=	2.0
OUTSIDE DIAM	$d_W OD$	=	2.5
DEPTH TO:			
WATER LEVEL	h	=	4.17
BASE OF SEAL	S	=	4.0
BASE OF SCREEN	TD_S	=	15.0
BASE OF SUMP	TD_C	=	16.0
ESTIMATED FILTER PACK POROSITY	P	=	0.25

Diameters in (inches) : Depths in (feet)

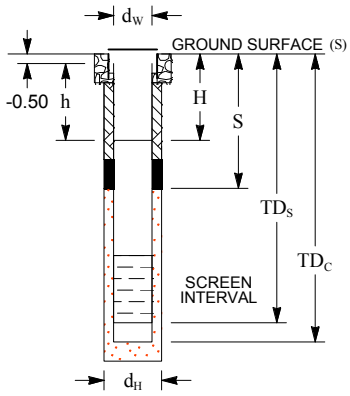

PURGE VOLUME CALCULATION

CASING VOLUME =

$$V_C = \pi \left(\frac{d_W ID}{2}\right)^2 (TD_C - H) = 3.14 \left(\frac{0.17}{2}\right)^2 (16.0 - 4.7)$$

$$= 0.25 \text{ ft}^3$$

FILTER PACK PORE VOLUME =

$$V_F = \pi \left[\left(\frac{d_H}{2}\right)^2 - \left(\frac{d_W OD}{2}\right)^2\right] (TD_s - (S \text{ or } H)^*)(P)$$

$$= 0.81 \text{ ft}^3$$

TOTAL WELL VOLUME =

$$V_T = V_C + V_F = 1.06 \text{ ft}^3 \times 7.48 \text{ gal/ft}^3 = 7.9 \text{ gal}$$

(* If S > H, use S; If S < H, use H)

DEVELOPMENT LOG					CUMULATIVE TOTAL REMOVED		WATER CHARACTERISTICS					COMMENTS
DATE	TIME BEGIN	TIME FINISH	METHOD	WATER REMOVED (GAL)	GAL	WELL VOLUMES	pH	CONDUCTIVITY (mmhos/cm)	TURBIDITY (NTU)	TEMPERATURE (°C)	DISSOLVED OXYGEN (ppm)	
10/12/05	14:20	14:35	SB	0	0	0.00	n.a.	n.a.	n.a.	n.a.	n.a.	Surged well
10/12/05	14:40	14:41	SP	1	1	0.13	7.02	0.744	*MLE	17.1	19.9	
10/12/05	14:41	14:46	SP	4	5	0.63	7.42	0.689	153	17.2	0.49	
10/12/05	14:46	14:50	SP	5	10	1.26	6.9	0.683	64	17.4	1.38	
10/12/05	14:50	14:54	SP	5	15	1.89	6.45	0.673	37	17.4	3.56	
10/12/05	14:54	14:58	SP	5	20	2.52	6.37	0.67	10	17.4	3.28	
10/12/05	14:58	15:02	SP	5	25	3.15	6.38	0.685	*MLE	17.4	2.12	
10/12/05	15:02	15:06	SP	5	30	3.78	6.32	0.703	*MLE	17.5	2.23	
10/12/05	15:06	15:10	SP	5	35	4.41	6.39	0.682	441	17.5	5.4	
10/12/05	15:10	15:14	SP	5	40	5.04	6.41	0.688	47	17.5	12.39	
10/12/05	15:14	15:19	SP	5	45	5.67	6.59	0.666	*MLE	17.2	8.38	
10/12/05	15:19	15:24	SP	5	50	6.30	6.54	0.679	10	17.1	6.89	

SCS ENGINEERS

WELL DEVELOPMENT RECORD

WELL NUMBER	PROJECT	JOB NUMBER	SITE	RECORDED BY
MW-13	Schmidbauer Lumber	01203316.00	1099 Waterfront Drive	Amy Yardley

PROJECT LOCATION	AIR TEMPERATURE	WEATHER	SUBCONTRACTOR
1099 Waterfront Drive Eureka, California		Overcast	None

METHOD

HAND PUMP (HP) ____
SUBMERSIBLE PUMP (SP) X
BAILER (B) ____
SURGE BLOCK (SB) X

DEVELOPMENT CRITERIA

Minimum of 4 well volumes or until discharge is clear and water characteristics have stabilized.

REMARKS

* Oil/water interface probe used to check for NAPLs. MLE- Meter Limit Exceeded (<999 ntu's).

HOLE DIAMETER d_H = 8.0

WELL CASING
- INSIDE DIAM $d_W ID$ = 2.0
- OUTSIDE DIAM $d_W OD$ = 2.5

DEPTH TO:
- WATER LEVEL h = 5.51
- BASE OF SEAL S = 4.0
- BASE OF SCREEN TD_S = 15.0
- BASE OF SUMP TD_C = 16.5

ESTIMATED FILTER PACK POROSITY P = 0.25

Diameters in (inches) : Depths in (feet)

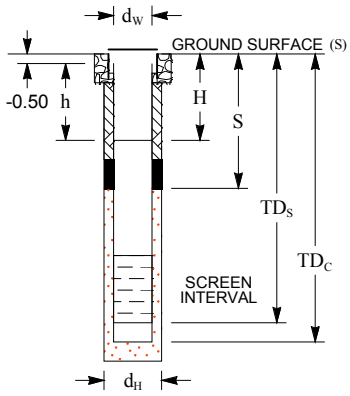

PURGE VOLUME CALCULATION

CASING VOLUME =

$$V_C = \pi \left(\frac{d_W ID}{2}\right)^2 (TD_C - H) = 3.14 \left(\frac{0.17}{2}\right)^2 (16.5 - 6.0)$$

$$= 0.23 \text{ ft}^3$$

FILTER PACK PORE VOLUME =

$$V_F = \pi \left[\left(\frac{d_H}{2}\right)^2 - \left(\frac{d_W OD}{2}\right)^2\right] (TD_s - (S \text{ or } H)^*)(P)$$

$$= 0.71 \text{ ft}^3$$

TOTAL WELL VOLUME =

$V_T = V_C + V_F =$ **0.94 ft³ x 7.48 gal/ft³ = 7.0 gal**

(* If S > H, use S; If S < H, use H)

DEVELOPMENT LOG					CUMULATIVE TOTAL REMOVED		WATER CHARACTERISTICS					COMMENTS
DATE	TIME BEGIN	TIME FINISH	METHOD	WATER REMOVED (GAL)	GAL	WELL VOLUMES	pH	CONDUCTIVITY (mmhos/cm)	TURBIDITY (NTU)	TEMPERATURE (°C)	DISSOLVED OXYGEN (ppm)	
10/12/05	14:05	14:25	SP	0	0	0.00	n.a.	n.a.	n.a.	n.a.	n.a.	Surged well
10/12/05	14:27	14:35	SP	10	10	1.43	6.65	1.08	*MLE	16.6	2.58	
10/12/05	14:35	14:43	SP	10	20	2.85	6.28	1.05	*MLE	16.1	2.4	
10/12/05	14:43	14:47	SP	5	25	3.57	6.75	1.05	*MLE	16.1	2.4	
10/12/05	14:47	16:51	SP	5	30	4.28	6.77	0.804	377	16.1	2.79	
10/12/05	14:51	14:57	SP	5	35	4.99	6.71	0.806	300	16	2.08	
10/12/05	14:57	15:02	SP	3	38	5.42	6.75	0.804	330	16	2.5	
10/12/05	15:02	15:05	SP	3	41	5.85	6.69	0.805	156	16	2.83	
10/12/05	15:05	15:08	SP	2	43	6.14	6.7	0.805	88	16	2.1	
10/12/05	15:08	15:10	SP	2	45	6.42	6.76	0.803	90	16	2.37	
10/12/05	15:10	15:12	SP	3	48	6.85	6.76	0.803	151	16	2.43	

Appendix E:
Well Purge Records:
13 October 2005

SCS ENGINEERS

WELL PURGE RECORD

_Initial Sampling

WELL NUMBER: MW-10

PROJECT	JOB NUMBER	SITE	RECORDED BY
Schmidbauer Lumber	01203316.00	1099 Waterfront Drive	Bruce Taverner / A. Yardley

	PURGING METHOD	SAMPLING METHOD
HAND PUMP		
SUBMERSIBLE PUMP	X	
BAILER		X
OTHER		

PURGING CRITERIA: **Minimum of 3 wetted casing volumes (or 5 gallons minimum for 2" dia. wells), until water parameters (pH, temp., cond.) have stabilized (±10%), or until dry.**

REMARKS

*** Oil/water interface probe used to check for NAPLs; MLE = Meter Limit Exceeded**

CASING DIAMETER (D_C): 2.0

DEPTH TO:

WATER (h):

NAPL: n.a.*

NAPL THICKNESS: n.a.*

SCREEN DEPTH:

TOP: 5.0

BOTTOM: 15.0

TOTAL DEPTH (TD_C): 16.50

Diameters in (inches) : Depths in (feet)

ONE CASING VOLUME:
$[TD_C - H]\ [3.14\ (D_C / 2)^2]\ [7.48\ gal/ft^3]$: gallons

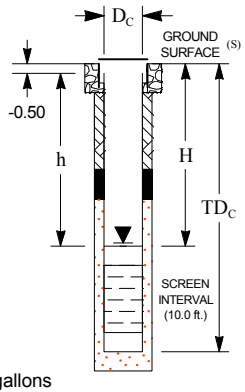

DATE OF SAMPLING:	10/13/2005
WEATHER:	Clear
TAGGED WATER LEVELS FROM TOC:	4.08 / 4.08
TAGGED WELL DEPTH FROM TOC:	15.01
PURGE VOLUME (3 CASING VOLUMES):	gallons
DEPTH TO WATER FOR 80% RECHARGE:	ft. below TOC
TIME OF SAMPLING:	15:30
DEPTH TO WATER AT TIME OF SAMPLING:	6.08 ft. below TOC
APPEARANCE OF SAMPLE:	Clear
LABORATORY:	Alpha Analytical Laboratory, Inc.

SEE CHAIN OF CUSTODY FORM FOR ANALYTICAL INFORMATION.

PURGING DATA				CUMULATIVE TOTAL REMOVED		WATER CHARACTERISTICS					COMMENTS
DATE	TIME BEGIN	TIME FINISH	WATER REMOVED (GAL)	GAL	CASING VOLUMES	pH	CONDUCTIVITY (mmhos/cm)	TURBIDITY (NTU)	TEMPERATURE (°C)	DISSOLVED OXYGEN (ppm)	
10/13/05	15:13	15:14	2	2		6.72	0.659	899	15.3	2.45	
10/13/05	15:14	15:16	2	4		6.59	0.767	*MLE	15.1	2.62	
10/13/05	15:16	15:17	2	6		6.63	0.688	*MLE	15.1	2.59	

SCS ENGINEERS

WELL PURGE RECORD

_Initial Sampling

WELL NUMBER: MW-11

PROJECT	JOB NUMBER	SITE	RECORDED BY
Schmidbauer Lumber	01203316.00	1099 Waterfront Drive	Bruce Taverner / A. Yardley

	PURGING METHOD	SAMPLING METHOD
HAND PUMP		
SUBMERSIBLE PUMP	X	
BAILER		X
OTHER		

PURGING CRITERIA: **Minimum of 3 wetted casing volumes (or 5 gallons minimum for 2" dia. wells), until water parameters (pH, temp., cond.) have stabilized (±10%), or until dry.**

REMARKS

*** Oil/water interface probe used to check for NAPLs; MLE = Meter Limit Exceeded**

CASING DIAMETER (D_C): 2.0

DEPTH TO:

WATER (h):

NAPL: n.a.*

NAPL THICKNESS: n.a.*

SCREEN DEPTH:

TOP: 5.0

BOTTOM: 15.0

TOTAL DEPTH (TD_C): 16.50

Diameters in (inches) : Depths in (feet)

ONE CASING VOLUME:
$[TD_C - H]\ [3.14\ (D_C / 2)^2]\ [7.48\ gal/ft^3]$: gallons

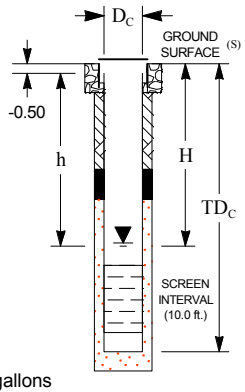

DATE OF SAMPLING:	10/13/2005
WEATHER:	Clear
TAGGED WATER LEVELS FROM TOC:	4.15 / 4.15
TAGGED WELL DEPTH FROM TOC:	15.11
PURGE VOLUME (3 CASING VOLUMES):	gallons
DEPTH TO WATER FOR 80% RECHARGE:	ft. below TOC
TIME OF SAMPLING:	15:35
DEPTH TO WATER AT TIME OF SAMPLING:	4.18 ft. below TOC
APPEARANCE OF SAMPLE:	Clear
LABORATORY:	Alpha Analytical Laboratory, Inc.

SEE CHAIN OF CUSTODY FORM FOR ANALYTICAL INFORMATION.

PURGING DATA				CUMULATIVE TOTAL REMOVED		WATER CHARACTERISTICS					COMMENTS
DATE	TIME BEGIN	TIME FINISH	WATER REMOVED (GAL)	GAL	CASING VOLUMES	pH	CONDUCTIVITY (mmhos/cm)	TURBIDITY (NTU)	TEMPERATURE (°C)	DISSOLVED OXYGEN (ppm)	
10/13/05	15:16	15:17	1	1		7.78	1.140	545	16.1	0.51	
10/13/05	15:17	15:19	2	3		7.64	1.160	437	15.6	1.53	
10/13/05	15:19	15:21	2	5		7.44	1.180	80	15.6	11.76	
10/13/05	15:21	15:22	1	6		7.33	1.070	45	15.6	5.94	

SCS ENGINEERS

WELL PURGE RECORD

_Initial Sampling

WELL NUMBER: MW-12

PROJECT	JOB NUMBER	SITE	RECORDED BY
Schmidbauer Lumber	01203316.00	1099 Waterfront Drive	Bruce Taverner / A. Yardley

	PURGING METHOD	SAMPLING METHOD
HAND PUMP		
SUBMERSIBLE PUMP	X	
BAILER		X
OTHER		

PURGING CRITERIA: **Minimum of 3 wetted casing volumes (or 5 gallons minimum for 2" dia. wells), until water parameters (pH, temp., cond.) have stabilized (±10%), or until dry.**

REMARKS

*** Oil/water interface probe used to check for NAPLs; MLE = Meter Limit Exceeded**

CASING DIAMETER (D_C): 2.0

DEPTH TO:

WATER (h):

NAPL: n.a.*

NAPL THICKNESS: n.a.*

SCREEN DEPTH:

TOP: 5.0

BOTTOM: 15.0

TOTAL DEPTH (TD_C): 16.00

Diameters in (inches) : Depths in (feet)

ONE CASING VOLUME:
$[TD_C - H]\ [3.14\ (D_C / 2)^2]\ [7.48\ gal/ft^3]$: gallons

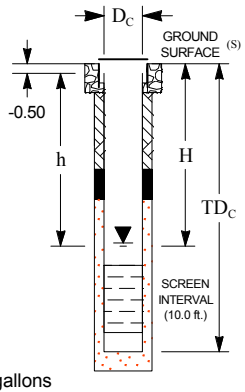

DATE OF SAMPLING:	10/13/2005
WEATHER:	Clear
TAGGED WATER LEVELS FROM TOC:	3.86 / 3.86
TAGGED WELL DEPTH FROM TOC:	14.95
PURGE VOLUME (3 CASING VOLUMES):	gallons
DEPTH TO WATER FOR 80% RECHARGE:	ft. below TOC
TIME OF SAMPLING:	14:22
DEPTH TO WATER AT TIME OF SAMPLING:	3.90 ft. below TOC
APPEARANCE OF SAMPLE:	Clear
LABORATORY:	Alpha Analytical Laboratory, Inc.

SEE CHAIN OF CUSTODY FORM FOR ANALYTICAL INFORMATION.

PURGING DATA				CUMULATIVE TOTAL REMOVED		WATER CHARACTERISTICS					COMMENTS
DATE	TIME BEGIN	TIME FINISH	WATER REMOVED (GAL)	GAL	CASING VOLUMES	pH	CONDUCTIVITY (mmhos/cm)	TURBIDITY (NTU)	TEMPERATURE (°C)	DISSOLVED OXYGEN (ppm)	
10/13/05	14:13	14:14	1	1		7.20	0.632	*MLE	14.5	0.53	
10/13/05	14:14	14:16	2	3		7.26	0.657	96	17.0	0.23	
10/13/05	14:16	14:18	2	5		7.04	0.676	235	17.2	0.81	
10/13/05	14:18	14:19	1	6		6.98	0.683	330	17.0	3.24	

SCS ENGINEERS

WELL PURGE RECORD

_Initial Sampling

WELL NUMBER: MW-13

PROJECT	JOB NUMBER	SITE	RECORDED BY
Schmidbauer Lumber	01203316.00	1099 Waterfront Drive	Bruce Taverner / A. Yardley

	PURGING METHOD	SAMPLING METHOD
HAND PUMP		
SUBMERSIBLE PUMP	X	
BAILER		X
OTHER		

PURGING CRITERIA: Minimum of 3 wetted casing volumes (or 5 gallons minimum for 2" dia. wells), until water parameters (pH, temp., cond.) have stabilized (±10%), or until dry.

REMARKS

* Oil/water interface probe used to check for NAPLs; MLE = Meter Limit Exceeded

CASING DIAMETER (D_C): 2.0

DEPTH TO:

WATER (h):

NAPL: n.a.*

NAPL THICKNESS: n.a.*

SCREEN DEPTH:

TOP: 5.0

BOTTOM: 15.0

TOTAL DEPTH (TD_C): 16.50

Diameters in (inches) : Depths in (feet)

ONE CASING VOLUME:
$[TD_C - H]\ [3.14\ (D_C / 2)^2]\ [7.48\ gal/ft^3]$: gallons

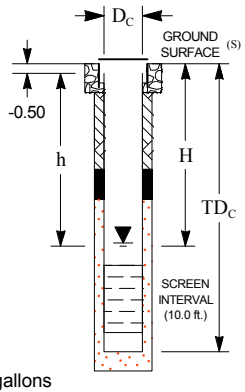

DATE OF SAMPLING:	10/13/2005
WEATHER:	Clear
TAGGED WATER LEVELS FROM TOC:	6.85 / 6.85
TAGGED WELL DEPTH FROM TOC:	14.95
PURGE VOLUME (3 CASING VOLUMES):	gallons
DEPTH TO WATER FOR 80% RECHARGE:	ft. below TOC
TIME OF SAMPLING:	14:25
DEPTH TO WATER AT TIME OF SAMPLING:	7.03 ft. below TOC
APPEARANCE OF SAMPLE:	Clear
LABORATORY:	Alpha Analytical Laboratory, Inc.

SEE CHAIN OF CUSTODY FORM FOR ANALYTICAL INFORMATION.

PURGING DATA				CUMULATIVE TOTAL REMOVED		WATER CHARACTERISTICS					COMMENTS
DATE	TIME BEGIN	TIME FINISH	WATER REMOVED (GAL)	GAL	CASING VOLUMES	pH	CONDUCTIVITY (mmhos/cm)	TURBIDITY (NTU)	TEMPERATURE (°C)	DISSOLVED OXYGEN (ppm)	
10/13/05	14:10	14:11	1	1		6.69	0.791	192	16.4	1.47	
10/13/05	14:11	14:12	2	3		6.58	0.769	590	16.2	2.75	
10/13/05	14:12	14:14	2	5		6.77	0.778	501	16.1	2.92	