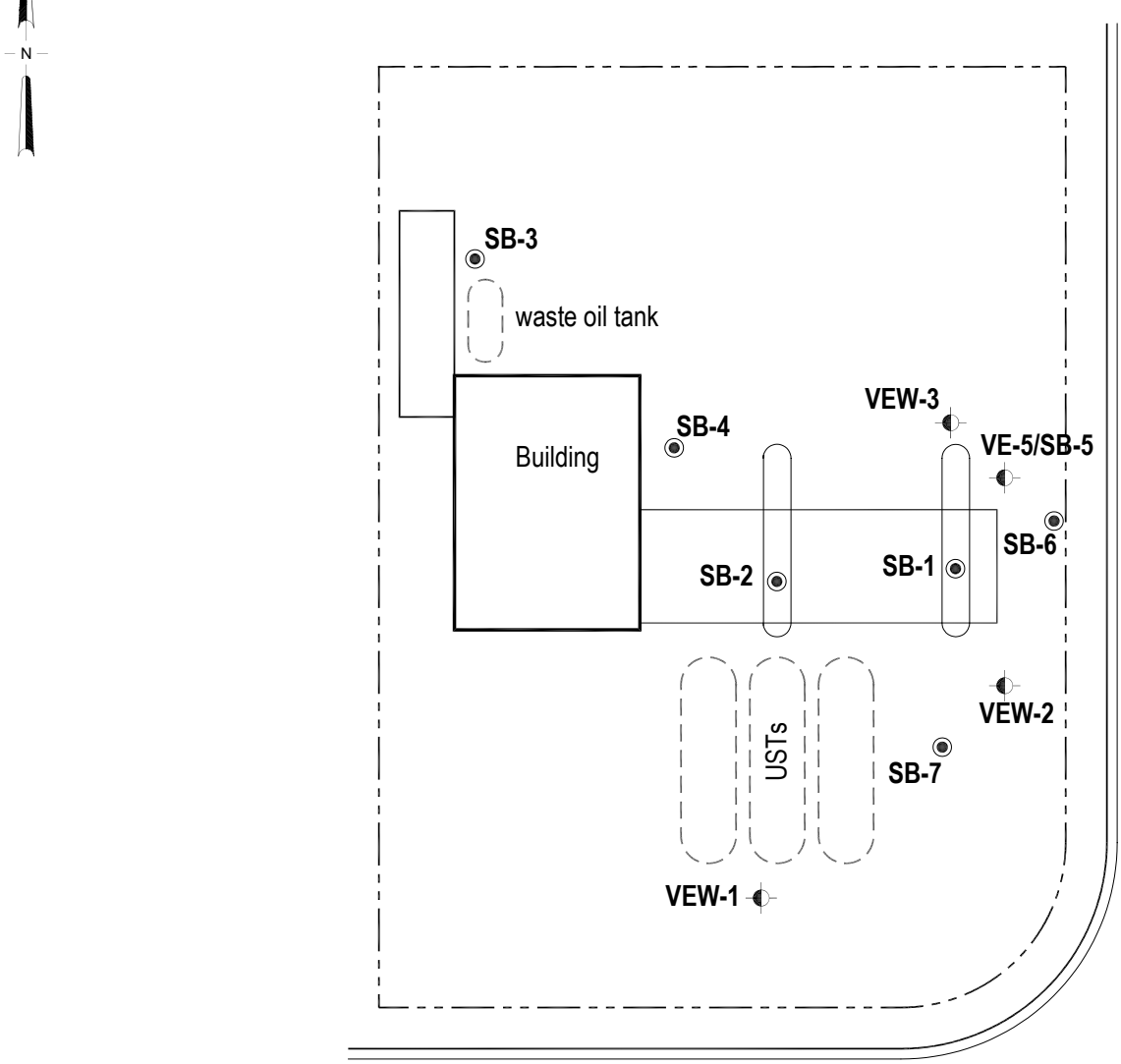

EXPLANATION

MW-1 Vapor Extraction well location

SB-1 Soil boring location

0 15 30

Scale (ft)

FIGU

F:\PROJECT\

CAMBRIA